UNHCR Request for Proposal
RFP/2019/025

Headquarters Telephony Replacement

Terms of Reference (Annex A)

Division of Information Systems and Telecommunications (DIST)
Customer Support Service / HQ Site Support

Geneva, Aug 2019

Table of Contents

1 Introduction ... 3
1.1 Who we are ... 3
1.2 Overview and Objectives of this RFP ... 3
1.3 Document purpose ... 3
1.4 RFP scope ... 3

2 Existing infrastructure ... 4
2.1 Telephony overview ... 4
2.2 Videoconferencing ... 6
2.3 Skype for Business ... 6
2.4 Network & Cabling ... 6
2.5 Applications ... 7
2.6 Mobile telephones ... 7

3 Target system ... 8
3.1 Technical scope ... 8
3.2 General design principles ... 8
3.3 User devices ... 9
3.4 Features ... 9
3.5 Quantities ... 10
3.6 Options ... 10
3.7 Out-of-scope ... 11

4 Delivery ... 12
4.1 Operational model ... 12
4.2 Project Team ... 12
4.3 Detailed design ... 12
4.4 Testing ... 13
4.5 Proof of concept ... 13
4.6 Migration ... 13
4.7 Project management ... 13
4.8 Training ... 14
4.9 Documentation ... 15
4.10 Recycling old equipment ... 15
4.11 Bidder's profile & References ... 15

5 Operations ... 16
5.1 Roles and Responsibilities ... 16
5.2 Moves, adds and changes (MACs) ... 16
5.3 Maintenance ... 17
5.4 Service levels ... 17
5.5 Incident management ... 18
5.6 Warranty ... 18
5.7 Software upgrades and patches ... 18

6 RFP Technical Offers ... 19

7 RFP Contractual Requirements ... 20
7.1 Contract Terms and Conditions ... 20
7.2 UNHCR Vendor Registration Form ... 20
7.3 UNHCR Supplier Code of Conduct ... 20
7.4 Contract Duration ... 20

8 RFP Commercial Response ... 21

9 Evaluation ... 22
9.1 Technical Evaluation ... 22
9.2 Financial Evaluation ... 22

1 Introduction

1.1 Who we are

The Office of the United Nations High Commissioner for Refugees (UNHCR) was established by the United Nations General Assembly in 1950 to provide protection and assistance to refugees and Internally Displaced People (IDPs).

UNHCR is today one of the world's principal humanitarian agencies, its workforce of more than 17,500 personnel helping over 75 million people in more than 130 countries. Staff members work in a diversity of locations and conditions including three Headquarters locations (Geneva, Budapest, and Copenhagen).

Further information on UNHCR, its mandate and operations can be found on its official website, http://www.unhcr.org

1.2 Overview and Objectives of this RFP

The telephony system at the UNHCR's headquarters is reaching the end of its lifecycle and extended supplier support. The telephony system is a hybrid IP–Digital Avaya platform based on a legacy Nortel CS1000 technology.

UNHCR seeks through this RFP to identify a state-of-the-art scalable solution as a replacement, as well as a service provider who is capable of implementing and supporting this solution. Viable solutions may include cloud-based or on-premise.

Understanding the solution may encompass acquisition of physical devices or a service, UNHCR requires two financial responses to this RFP - one for capital expenditure acquisition (CapEx); and the other for an operating expense (OpEx) service.

1.3 Document purpose

This document provides a general description of the existing infrastructure and lists the required features allowing bidders to offer a turnkey solution addressing UNHCR's needs.

1.4 RFP scope

The scope of this RFP is to replace the Geneva HQ based telephony system with a new state-of-the-art IP-based telephony solution.

The proposal shall include:

- The core-logic for a complete telephony system;
- The endpoints: Desk phones and/or softphones;
- Integration within UNHCR ecosystem;
- The implementation services;
- Support services; and
- All required hardware, software, and firmware to ensure a turn-key solution.

Note: It is the bidders' responsibility to bridge any information gaps in terms of understanding and addressing the scope of this RFP to provide a turnkey solution to UNHCR.

2 Existing infrastructure

2.1 Telephony overview

The UNHCR's telephony is based on an Avaya/Nortel hybrid system based. A snapshot of the current architecture is included an appendix to this document.

The UNHCR PBX system is connected to the PSTN as well as other systems as described below:

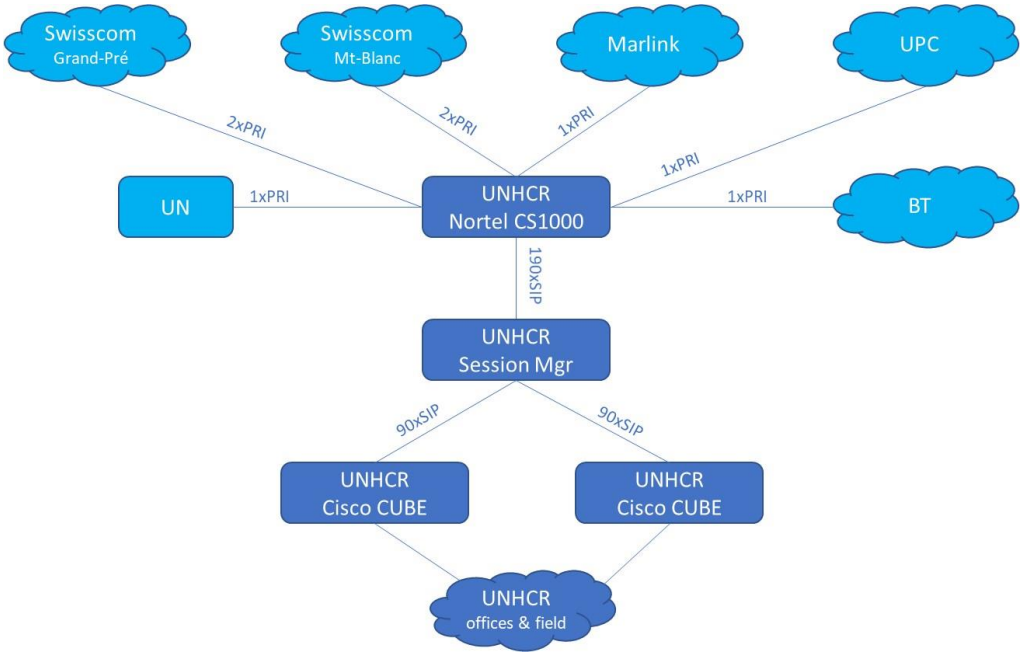

PSTN providers	Other Systems	Other peripherals
• Swisscom (2+2 PRIs) • UPC Cablecom (1 PRI, LCR) • BT (1 PRI, LCR) • Marlink (1 PRI, LCR)	• Avaya Session manager (190 SIP lines) • Link to UN PBX (1xPRI) • UNHCR Cisco Cube	• Call accounting system (Geotaxe)

Currently BT, Marlink, and UPC Cablecom (Sunrise) constitute the Least Cost Routing (LCR) platform, with pre-assigned PSTN destinations. While each of the service providers could serve as a potential fallback for a faulty destination, it is a common practice that Swisscom is used as a default fallback, pending repair of the faulty destination.

LCR service providers serve outbound traffic only (to the PSTN). Swisscom PRIs serve all inbound traffic (from the PSTN) as well as outbound traffic for domestic destinations, including Swisscom mobile.

BT and Marlink provide native SIP trunks into the PSTN connected to an E1 interface on the CS1000 PBX, through a standalone Session Border Controller (SBC). UPC Cablecom provides direct E1 connection.

It should be noted that Swisscom has announced the phasing out of all H.320 digital connections for Q3 2019. In that respect, E1 interfaces will not be required for the purpose of this RFP.

A PRI trunk links UNHCR to the UN Office in Geneva (UNOG) and serves for pre-selection-based communications between the two offices.

An Avaya session manager is connected directly to a redundant Cisco CUBE SBCs network (2x90 SIP channels) which connects to all other UNHCR remote sites as well as to the Cisco videoconferencing infrastructure in Geneva.

The Cisco CUBEs are based on 2900-type Cisco ISRs with PVDN 192 channels extension boards. They connect to UNHCR's remote sites through the corporate DMVPM. There are currently ~420 dial-peers configured.

2.1.1 Telephony end points

The telephony end points inventory is as follows:

Model	Type	Quantity
Nortel 1120	IP	1
Nortel 1140	IP	192
Nortel 1220	IP	6
Nortel 1230	IP	10
Nortel 2033	IP Conference	1
i2050	Softphone	20
Pronto I	Analog, wall mount	50 (*)
Polycom Soundstation Duo	SIP/Analogue	59
Polycom Soundstation 2	Analogue	21
M3904	Digital	1019

(*) The current Analogue Ports capacity of the PBX is 202.

2.1.2 Peripherals

Following peripherals are currently connected to the main CS1000E system:

1. **Avaya Aura Conferencing server (AACS)**: Hosting the audio bridges for audio conferences. The current system capacity (number of licenses) is 100 conference ports.
2. **Call accounting**: Geotaxe by Memobox. Collects the CDRs from Geneva telephony systems
3. **Voicemail Nortel CallPilot**: Voicemail, IVR and FAX services.
4. **Avaya Aura Contact Center (AACC)**: no longer in use

2.1.3 Versions summary

The version currently in use are as follows:

Nortel Call-Server 1000E	7.65 Q
Nortel Signalling-Servers	7.65 P
Nortel Call-Pilot Server	5.1.04.04
Nortel Conference-Bridge	4.03
Avaya Session manager	7.2.1
Avaya Aura Conferencing	7.0

Cisco CUBE iOS	15.5(3)M6a
Cisco CUBE Bootstrap	15.0(1r)M9

License information for Avaya and Cisco CUBE are provided in Appendix A of this document.

2.2 Videoconferencing

The UNHCR has several videoconferencing rooms with (mostly) Cisco endpoints. The videoconferencing infrastructure is based on Cisco Expressway and is depicted below:

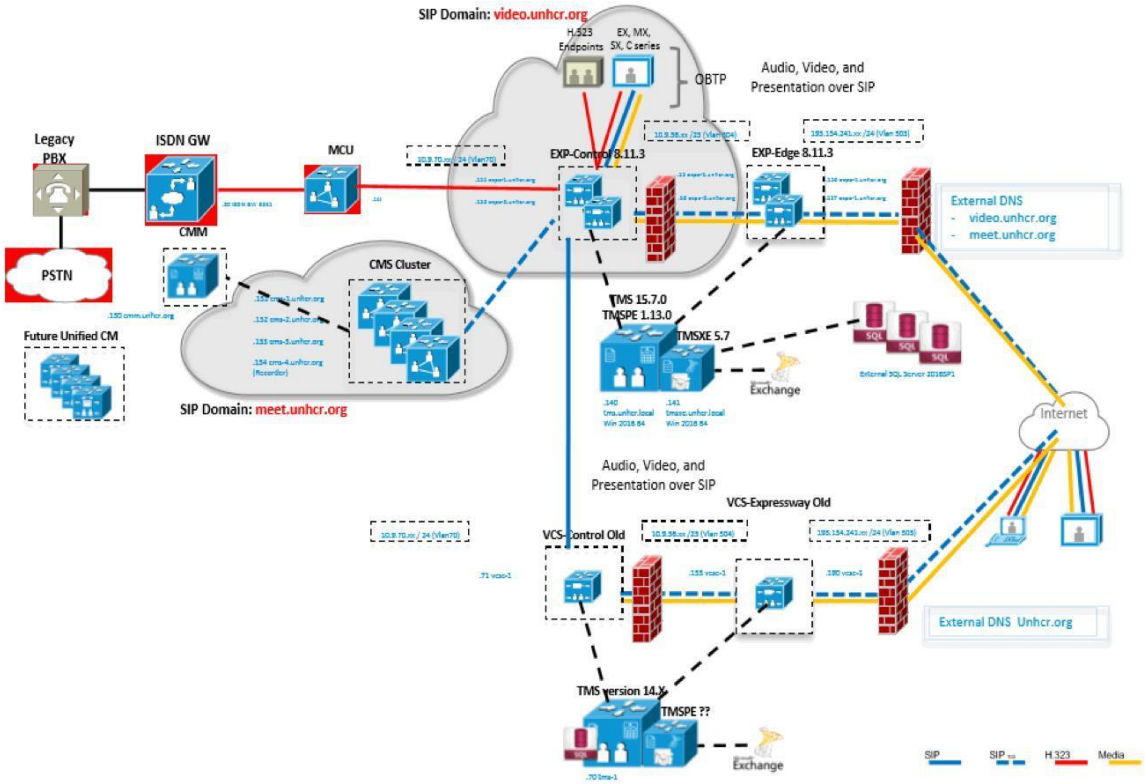

2.3 Skype for Business

All users at UNHCR's Headquarters have access to Office 365 Skype for Business. Increasingly, Microsoft Teams is being used.

2.4 Network & Cabling

Datacenters

- UNHCR has one data center (Safehost SA, Plan-Les-Ouates, Geneva), where the Cisco CUBE servers are located. The CS1000 as well as all its peripherals are location in the basement of the UNHCR HQ building in Geneva.

LAN Network

- UNHCR's LAN network in Geneva is based on Cisco switches and routers.
- There is currently no VLAN separation nor QoS setup for voice traffic.
- Power over Ethernet (PoE) capacity is available on most of the switches.

Internet breakout

- Internet breakout is done via three links to two different Internet service providers.

Cabling

- The cabling in HQ Geneva is Cat5/Cat5e. Patch cables are Cat5/Cat5e/Cat6

2.5 Applications

UNHCR employees use standard PCs currently based on Windows 7, in progress of migration to Windows 10. Although UNHCR applications were traditionally used with Internet Explorer, no specific browser is imposed. (Chrome, Firefox, Edge, etc.). Microsoft Intune will be used to manage all Windows 10 devices.

There is limited use of the Avaya 2050 IP softphone. It is expected that as UNHCR's workforce becomes more mobile, access to a softphone facility will increase.

All users at UNHCR's Headquarters have access to Office 365 Skype for Business. Increasingly, Microsoft Teams is being used.

Office 365 is currently deployed at the corporate level (M3 License).
Azure Multi Factor Authentication is being implemented on a gradual basis.
Microsoft Active Directory version is 2012.

2.6 Mobile telephones

UNHCR does not have a corporate brand/model of mobile phone. Several models of iPhone and Android-based smartphones are in use. Mobile Device Management (MDM) is currently not used in the UNHCR environment but this is planned.

3 Target system

3.1 Technical scope

The following components need to be replaced:

- Nortel CS1000E PBX;
- Avaya session manager;
- Avaya conferencing server;
- Nortel call pilot server;
- All current desk phones;
- Cisco CUBE SBCs; and
- All other peripherals / accessories / connectors required to operate the new platform.

The present call-accounting application (Geotaxe) will be preserved at this stage. UNHCR may in the short or medium term, proceed to release a separate RFP for telephony billing.

3.2 General design principles

The following design requirements shall be considered when defining the required target solution.

Architecture
Depending on the type of the proposed technology and, based on the information provided in section 2.4, it is left to the bidders to determine the most suitable architecture for UNHCR. A cloud-based architecture could also be considered providing the offer represents a turnkey solution.

System reliability
The core system must be designed according to high availability principles and should not have any single point of failure. The required service levels are described in section 5.4. Telephony is the only service that is required for business continuity. All other services (voicemail, fax server, etc.) do not need to be redundant.

Geographical redundancy
The proposed solution must be geographically redundant. UNHCR operates only one datacenter; in that respect, hosting e.g. at the supplier's datacenter, will need to be considered.

Hardware
Assuming a hardware-based solution is proposed, the supplier must provide all the servers (including OS) required to run the designed solution.

Environmental Requirements
All necessary environment requirements shall be listed so that the UNHCR project team is able to prepare the implementation phase. This includes, but is not limited to:

- Number of switch ports;
- Rack space;
- Number of power outlets;
- Power consumption (W);
- Heat dissipation (BTU/h); and
- Other parameters as required.

Please refer to the "Server List" worksheet in the Technical Response Workbook for more details.

Scalability

In order to cater for future growth, the new platform should be sized to support a minimum of 5'000 users without further core infrastructure extension.

PSTN connection
All PSTN links will be considered to be SIP trunk technology for the purpose of this RFP. An SBC will be required for non-SIP connections to the PSTN or across other systems e.g. the private line to the UN Office in Geneva (UNOG). The connections in section 2.1 need to be preserved with the same capacity.

3.3 User devices

Desk phones vs Softphones: It is unknown at this stage how many users will still require a desk phone versus users who will use softphones. Therefore, the proposal shall aim for 50% desk phones and 50% softphones. UNHCR may change this distribution, at its own discretion. All desk phones users should also have the possibility to install the softphone application and use either or a combination of the two solutions (Shared-control mode). In that respect the design and the financial offer should reflect the required level of granularity to that choice flexibility.

Conference phones: Every meeting room must be equipped with a "spider" conference phone. The preference is to reuse, as much as feasible, the existing Polycom teleconference equipment while provisioning at the design level for their replacement upon their end of life.
Note: There will be no analog lines to be provided.

All quantities are described in paragraph 3.5.

3.4 Features

UNHCR is looking for a simple yet scalable design for its future telephony platform. As UCC features (chat, presence, collaboration etc.) are already provided by other tools (WebEx, Skype for Business, Microsoft Teams), they are not required at this stage. The platform should however readily support these features for an eventual future deployment. Voice services should be offered for desk phone users, while voice & video services for softphone users.

All features to be covered are listed on the "Specifications" worksheet in the Technical Response Workbook, (headings 1 to 4).

The following peripheral capacity should be provided:

Voicemail system
Only a limited number of users require voicemail services. All specifications are listed on the "Specifications" worksheet of the Technical Response Workbook (heading 5). The number of voice mail mailboxes is listed in section 3.5.

FAX server
Fax communications will be received through virtual numbers and are routed to employees' e-mail boxes. Employees should also be able to send a fax directly from their email box. All specifications are listed on the "Specifications" worksheet of the Technical Response Workbook (heading 6). Currently, the UNHCR Pull Print network is used for fax transmission.

Audio conferencing platform
Conference calls are core in UNHCR. A platform should be provided to host internal and external participants, seamless audio conferencing. All specifications are listed in the "Specifications" worksheet of the Technical Response Workbook (heading 7).

Mobility
Bidders are required to provide a solution allowing total mobility, making and receiving calls seamlessly on their desk phones, smartphones, and softphones with switchover initiated by the user, while guaranteeing voice quality and network security. All specifications are listed in the "Specifications" worksheet of the Technical Response Workbook (heading 8).

3.5 Quantities

Following quantities should be included as per unit cost.

Item	Quantity
Desk phones	660
Softphones	660
Conference room phones	30
SIP channels to other systems	50
SIP channels to PSTN providers	150
SIP channels to remote UNHCR locations	40
Voice mailboxes	100
Mobile users	100
Fixed-mobile simultaneous ring	200
Audio conference ports	120

3.6 Options

The following features should be provided as an option. UNHCR will decide at its own discretion to acquire them for some or all users.

Click-to-call: The users should be able to dial any number out of Outlook or a web browser by simply clicking on a number and pressing a hotkey.

Voice recording: The users should be able to record their conversations. Voice recording can be provided in 2 options: Basic (on-demand) and advanced. For both options, the solution will also include an audio message informing users that are being recorded.

- **Basic voice recording** is triggered by the user by pressing a key, the recording then starts from the moment the key is pressed. The recordings are typically stored onto the voicemail system.
- **Advanced voice recording** requires a dedicated platform and automatically records all conversations for a specific user. The user has the capacity to play back or archive specific recordings.

The voice recording optional feature should be scalable and will be offered for 20 users initially.

All specifications are listed in the "Specifications" worksheet of the Technical Response Workbook (headings 9 & 10).

Desk phone power supplies: individual compatible power supplies should be suggested, on per unit cost basis, to account for cases where PoE is not available or reliable.

3.7 Out-of-scope

The following items are considered out of scope:

- Cabling, patch panels, and patch cables;
- UNHCR Corporate Directory, e-mail services and other IT systems, which might be integrated into the overall solution but are or will be supplied by UNHCR;
- Call Accounting;
- Switches, routers, firewalls, and other network devices;
- PSTN lines; and
- Headsets.

4 Delivery

4.1 Operational model

The roles and responsibilities for the implementation are as follows:

	Supplier	UNHCR
Solution design		
Architecture	Responsible	
Network and security impact	Contributor	Responsible
Installation		
Equipment and licenses supply		
Software & licenses	Responsible	
Physical & Virtual server	Responsible	
Operating systems	Responsible	
Network components	Validation	Responsible
Setup		
Server SW components (and configuration)	Responsible	
Desk phones installation & removal	Validation	Responsible
PC client installation	Contributor	Responsible
Tests		
Platform tests	Responsible	Validation
User acceptance tests	Validation	Responsible
Proof of concept	Responsible	Contributor
Training		
Administrators	Responsible	
Super-users	Responsible	
Users		Responsible
Go-live	Responsible	Validation
Project management	Responsible	Responsible
Old equipment disassembly & recycling	Responsible	Contributor

4.2 Project Team

The bidders should detail their internal team structure, their roles and responsibilities, inclusive of eventual sub-contractors; as well as all processes required to deliver the services, from the contract signature to final acceptance, and go live.

4.3 Detailed design

All bidders, should provide a detailed design of the suggested infrastructure, detailing all features that will be implemented as well as all pre-requisites for the proposed solution.

The following services should be provided as part of the preparation phase:

- Site surveys to collect necessary infrastructure information relevant to the design. This includes but is not limited to:
  - User list with profiles (i.e. Desk phone vs softphone); and
  - IT environment (Physical environment, Network configuration, Integration with tools such as the AD).

- Technical workshops with UNHCR in order to validate the solution infrastructure design and security. This is mandatory for (but not limited to) cloud deployments.

In addition, it should be noted that UNHCR may initiate an in depth review of the current dial plan and the global telephony architecture. UNHCR expects guidance from the bidders in harmony with the proposed solution.

4.4 Testing

The supplier is expected to carry out the following activities.

- Provide comprehensive test plans listing all features and behaviors to be validated prior to the go live phase. Test plans should be produced including, but not limited to, connectivity tests, resiliency tests, and functional tests. The test plans will be validated by UNHCR teams prior to deployment;
- System resiliency tests; and
- Migration to the new infrastructure once tests results have been validated and sufficient training has been given. The decision to go live lies with UNHCR, based on the following criteria:
    - All validation tests have been successfully completed;
    - No blocking issue remains;
    - All training has been provided.

All tests need to be formally validated by UNHCR.

4.5 Proof of concept

In order to test and validate the platform before migrating all users, UNHCR, in collaboration with the successful bidder, will pilot test the platform for a defined community of users, for a period of two weeks. Full deployment will start upon the success of the pilot phase.

4.6 Migration

Bidders will suggest their best approach to migrate users from the legacy to the new platform. In order to minimize the risks and avoid disrupting UNHCR operations, the cut-over will be done over a weekend.

As all the existing desk phones will be replaced, it is recommended that the new IP phones are positioned on the desks prior to the cut-over date. Following the cutover weekend, two support engineers are expected to be on site, at the opening of business on Monday, to provide support for the users.

Following a probation period of two weeks, and providing no major problems are detected, UNHCR will sign a project acceptance document. This milestone will trigger the start of the maintenance contract and the warranty period. The supplier will then handover the platform to UNHCR.

4.7 Project management

The provider is expected to provide an experienced certified Project Manager (Prince 2, PMP or equivalent) to coordinate all activities throughout the implementation of the new platform. The Project Manager will provide oversight for the following responsibilities:

- Provide an overall project plan with assigned resources and manage the plan throughout the project duration;

- Define a comprehensive migration plan, detailing all steps with clear risks mitigation and eventual rollback plans;
- Provide weekly status reports, including change management, risk management, actions, and issues logs;
- Organize a monthly (or any other period to be agreed upon) steering committee, with necessary agendas, content, and meeting minutes;
- Serve as the single point of contact to the UNHCR Project Manager to address any issues arising;
- Ensure all required documentation is produced and validated on a timely basis; and
- Coordination with the various telco providers as required, e.g. to migrate all trunks to SIP technology.

The project manager shall use the UNHCR approved formal project management tools and methodology.

4.8 Training

4.8.1 Platform Administration Training

An administrative training on how to manage the new platform will be provided to a group of UNHCR telecom administrators (3-4 staff). This training will be held at UNHCR's premises. This training will be held in English or French. The following topics will be covered:

- Create a new user;
- Delete a user;
- Modify extensions and/or holders;
- Pickup & hunt groups modifications;
- Configure mailboxes;
- Configure fax numbers/mailboxes;
- PC application (softphone) setup and configuration; and
- Basic troubleshooting steps.

A user guide summarizing these topics will be provided to the attendees after the training.

4.8.2 Super-user training

UNHCR end-users will be trained by "super-users". A super-user has a good knowledge of the various tools and will be responsible for the knowledge transfer to their team. Multiple sessions will be organized at UNHCR premises before the go-live to train the super-users.
The following topics will be covered:

- General use of the phone;
- How to use specific features (call forwarding, call pickup, ...);
- Program hot keys and speed-dials;
- Soft phone/Smartphone; and
- Other items as required.

A group of super users will not exceed 10 people. This training will be held in English or, French depending on the attendance.

4.9 Documentation

As part of the overall implementation, the following documentation is expected from the provider:

- Complete solution design, with
  - Detailed technical physical and logical diagrams;
  - IP addressing scheme;
  - Naming conventions;
  - Detailed description of all features implemented;
  - Backup strategy and backup storage locations; and
  - These documents will be updated as required e.g. following change requests during or after the implementation phase.
- Project Management related documents (plans, reports, etc.) in alignment with section 4.7;
- System admin guide, listing all necessary admin credentials for UNHCR access and necessary training documentation as detailed in section 4.8;
- Operations procedures, tools, and documentation, describing all necessary procedures, escalation path and relevant contacts;
- Equipment inventory. The following documentation will need to be provided:
  - List of all equipment installed with serial numbers, MAC addresses, IP addresses (if applicable) and license keys (if applicable) as well as the exact software or firmware version installed.
- Tests results as well as complete acceptance tests documentation;
- Service activation and Service acceptance notices duly signed;
- Training material on how to use the desk phones and the Unified Communications software(s) should be provided to UNHCR for further internal distribution. The documentation should be made available in English and French; and
- All documentation should be provided in electronic format.

4.10 Recycling old equipment

The selected bidder should also quote the costs to disassemble and recycle the legacy equipment. This equipment will be removed by UNHCR teams and handed over to the selected supplier for recycling in compliance with Swiss environmental legislation.

4.11 Bidder's profile & References

The bidders should specify their experience in deploying similar projects and answer the following points:

- Reference customers in Switzerland (if possible similar in size and scope to UNHCR); and
- Project team who will implement the solution with the associated profiles.

Each bidder should also give details about their organization: i.e. local & global presence, support center(s), number of employees, availability etc.

5 Operations

The service delivery process, from contract signature to operational handover, covering the service delivery process related activities is detailed in the following paragraphs.

5.1 Roles and Responsibilities

The following roles and responsibilities should apply:

	Bidder	UNHCR
Operations		
Support		
1st level support		Responsible
2nd level support	Responsible	
Basic changes		Responsible
Advanced changes	Responsible	Validation
Monitoring		
Performance monitoring	Responsible	
Capacity control	Contributor	Responsible
Inventory	Contributor	Responsible
Patches / upgrades applications	Responsible	Validation
Patches servers/OS	Responsible	Validation
Maintenance		
Equipment et licenses	Responsible	

5.2 Moves, adds and changes (MACs)

UNHCR will handle all basic, business as usual moves, adds, and changes on the new system. For more complex changes, UNHCR will mandate the provider on a time and materials basis or based on a formal quote for small projects. The changes will then be made following a best-effort rule defined by the supplier, preferably not exceeding 5 (five) weekdays.

Changes Type	Examples
Basic Changes (examples)	• Create a new extension • Change a user name • Modify a desk phone configuration • Configure a pickup group • Install the softphone software
Advanced Changes (example)	• New trunk configuration • Implementation of updated least cost routing tables

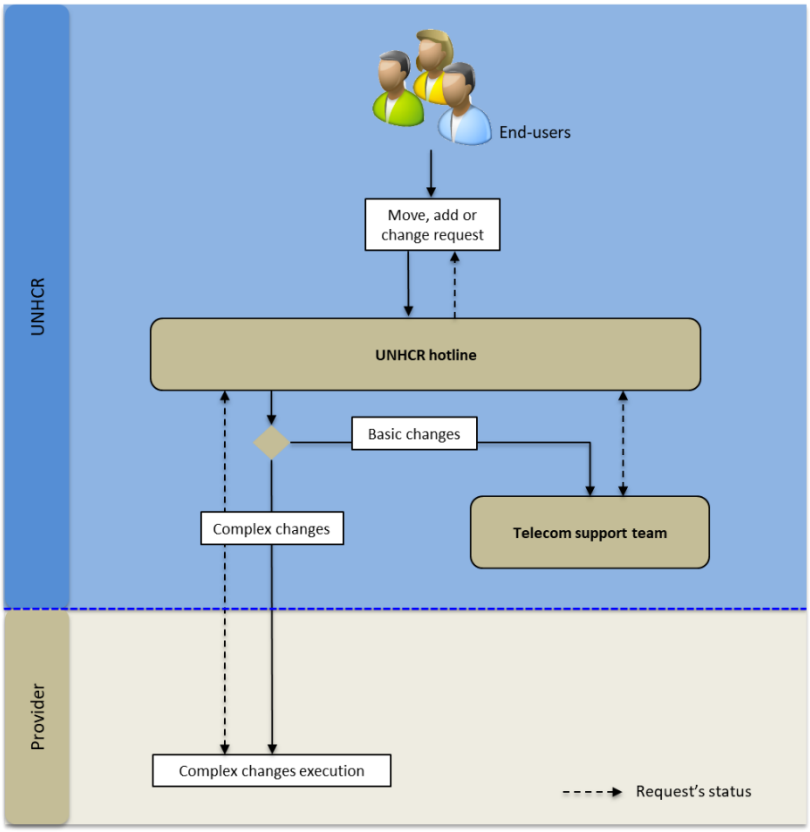

5.3 Maintenance

The level of maintenance proposed on each piece of equipment should be in accordance with the overall service availability commitments stated below. The core telephony and all the peripherals should be included in the maintenance contract, which will cover the costs for each remote or on-site intervention, including spare parts. No maintenance is required on the desk phones.

5.4 Service levels

The system should include the redundancy components in order to guarantee 99.95% availability (Maximum 4.38 hours downtime per year or 21.56 minutes per month).
The following faults classification shall apply:

Fault category	Description
Major	• More than 10% of the incoming or outgoing calls to/from are failing; • The platform redundancy is no longer guaranteed; • Security Breach.
Minor	• All other incidents (e.g. phone replacement)

The maximum on-site intervention response time will be as follows, Monday to Friday 7:00 – 19:00 CET:

- Major Outages: 4 hours (and same business day); and

- Minor Outages: Next business day.

Support will also be available outside office hours. All interventions will be chargeable at rates agreed between UNHCR and the selected provider as per service agreement contract.

5.5 Incident management

UNHCR will handle level 1 & 2 support. All incidents will first be handled by the UNHCR Global Service Desk and telephony support team and then eventually forwarded to the provider's hotline if not resolved. The provider's hotline should be reachable by phone or e-mail. Support in English and French should be offered.

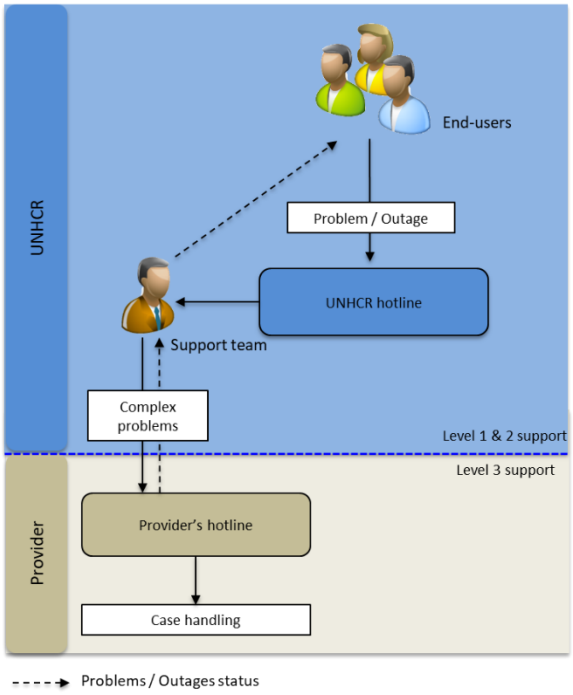

Remote access to the platform will be possible through a VPN connection provided by UNHCR.

5.6 Warranty

A warranty period defined by the supplier, covering all components of the new platform, will apply from the signature of the customer acceptance document. This warranty will cover the supply and onsite replacement and configuration of all equipment associated with the project and covered by this warranty.

5.7 Software upgrades and patches

The bidder will ensure that the platform remains covered by manufacturer support throughout the duration of the contract. If a software upgrade is necessary, UNHCR should be informed well in advance with the detailed impact of the upgrade. All potential upgrades within the next five years should be provisioned in the proposal but no more frequently than one major upgrade per rolling 12 month period. All necessary patches will be applied at no additional cost to UNHCR. The software costs shall be included within the yearly maintenance costs (Licenses including upgrades). The hardware and services should be estimated (if not known) and included in the corresponding field of the answer sheet.

6 RFP Technical Offers

IMPORTANT: The technical offer must not contain any pricing information. Including pricing with the technical response may be grounds for disqualifying your submission.

Bidders are required to fill in the Technical Response Matrix (Annex B) and to provide a technical offer document which addresses, at a minimum, the following:

6.1 Executive Summary - Company Profile and Qualifications

UNHCR requires all bidders to provide a high-level description of their company focusing on capacity to provide the required services. This includes but is not limited to:

- Full corporate name, group name, branches, business units, address and telephone number for their Headquarters;
- Evidence of presence in Switzerland with preferably at least one operations branch in close proximity to Geneva;
- Brief company history and profile;
- Previous experience with the United Nations for the provision of similar services;
- High level staffing structure with detailed technical support staffing structure;
- Description of non-staff workforce (affiliates, consultants, subcontractors);
- A minimum of three corporate references, exclusively from medium and large enterprises, multi-campus and/or multi-country coverage, for the provision of similar services;
- Corporate differentiators: relevant partner program, relevant certifications, relevant ISO certifications, showroom, demo lab, etc.;
- Description of Account Management approach;
- Description of Customer Service platform;
- Description of Fault Management processes, including but not limited to: adherence to ITIL processes, internal escalation processes, RMA processes, preventive and corrective maintenance; and
- Description of environmental considerations and corporate social responsibility programs (if any).

6.2 Technical Response

UNHCR requires all Bidders to provide a response to the Terms of Reference requirements set forth in Section 3.0 (Target System), Section 4.0 (Delivery), and Section 5.0 (Operations). **The Bidders should provide a comprehensive document describing in detail the proposed solution.**

7 RFP Contractual Requirements

7.1 Contract Terms and Conditions

Any contract awarded pursuant to this RFP will be governed by a standard UNHCR contract for the provision of goods and services, including the "UNHCR General Conditions of Contract for the Provision of Goods and Services" that is attached as Annex D to the RFP, which are in turn, based on terms and conditions common to all UN agencies. Acceptance of, and compliance with, these terms and conditions is a prerequisite for establishing any contract with UNHCR. In addition to accepting the UNHCR General Conditions of Contract for the Provision of Goods and Services, the awarded Contractor will be required to sign Annex D.

Please indicate your acknowledgement of the UNHCR General Conditions of Contract for the Provision of Goods and Services by signing this document (Annex D) and including it in your submitted Technical Offer.

7.2 UNHCR Vendor Registration Form

If your company is not already registered with UNHCR, please complete, sign, and submit the Vendor Registration Form in Annex E with your Technical Offer.

7.3 UNHCR Supplier Code of Conduct

UNHCR refers to the UN Supplier Code of Conduct in Annex F. By signing Annex F, you indicate your acknowledgement of the UN Supplier Code of Conduct.

7.4 Contract Duration

UNHCR anticipates entering into an agreement with a partner for a term of 3 years with a single option to renew for 2 more years. Based on satisfactory performance, the contract may be renewed for the further 2-year period for a total of 3 + 2 years. After 5 years, the selected Contractor should expect a new market survey to be conducted and a new RFP to be issued.

8 RFP Commercial Response

As part of this RFP, you have received an Excel spreadsheet (Annex C Financial Response Workbook) that should be used to submit the details of your price quotation. UNHCR requires two financial responses to this RFP:

1) Capital Expenditure acquisition (CapEx) whereby the solution, services and 5 years of maintenance are acquired as individual components; and
2) Operating Expenditure acquisition (OpEx) whereby an all-inclusive service price is offered for 5 years.

9 Evaluation

9.1 Technical Evaluation

UNHCR/DIST will form an evaluation committee which will examine all offers received in good order and prior to the closing deadline for submissions.

The Technical offer will be evaluated using the following criteria and percentage distribution: **70% from the total score:**

Company Qualifications	5%
Target System	30%
Delivery and Implementation	25%
Operations	10%
Total Technical	70%

9.2 Financial Evaluation

UNHCR Procurement Services will complete the evaluation of the price proposals and consolidate all results.

In general, UNHCR will select the offer that represents the “best value” to the organization and not necessarily the lowest price offer.

The Financial offer will use the following percentage distribution: **30% from the total score.**

Appendix A. Current PBX Architecture

A.1. Snapshot of current architecture

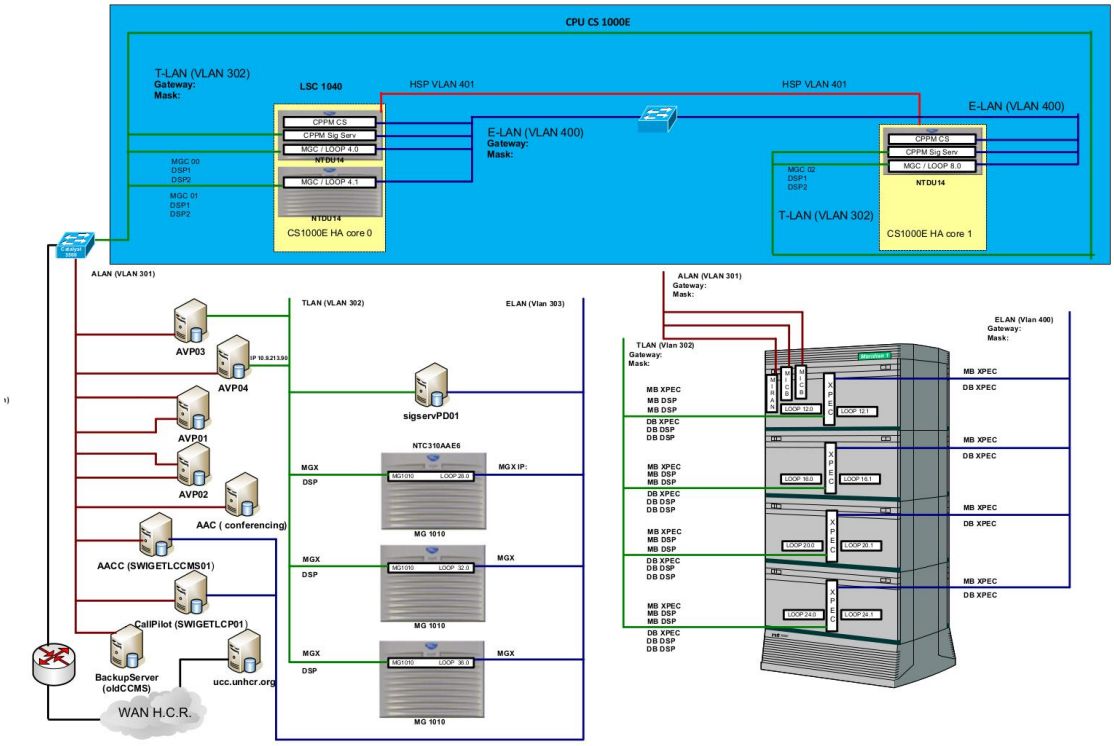

A.2. Avaya CS1000E license

The license inventory for the CS1000E is as follow:

System License Parameters

NAME	LIMIT	LEFT	USED	
TRADITIONAL TELEPHONES	1769	469	1300	
DECT USERS	0	0	0	
IP USERS	292	65	227	
BASIC IP USERS	0	0	0	1
TEMPORARY IP USERS	0	0	0	
DECT VISITOR USER	0	0	0	
ACD AGENTS	122	58	64	
MOBILE EXTENSIONS	200	176	24	
TELEPHONY SERVICES	0	0	0	
CONVERGED MOBILE USERS	0	0	0	
AVAYA SIP LINES	0	0	0	
THIRD PARTY SIP LINES	10	9	1	
PCA	200	194	6	
ITG ISDN TRUNKS	0	0	0	
H.323 ACCESS PORTS	0	0	0	
AST	8001	7194	807	
SIP CONVERGED DESKTOPS	0	0	0	
SIP CTI TR87	0	0	0	
SIP ACCESS PORTS	290	0	290	
RAN CON	8	0	8	
MUS CON	60	56	4	0
IP RAN CON	0	0	0	
IP MUS CON	0	0	0	0
IP MEDIA SESSIONS	0	0	0	0
TNS	65535	60629	4906	
ACDN	24000	23977	23	
AML	16	13	3	
IDLE_SET_DISPLAY	UNHCR			
LTID	65535	65535	0	
RAN RTE	512	510	2	
ATTENDANT CONSOLES	65535	65535	0	
IP ATTENDANT CONSOLES	0	0	0	
BRI DSL	10000	10000	0	
DATA PORTS	65535	65535	0	
PHANTOM PORTS	65535	65146	389	
TRADITIONAL TRUNKS	65535	65204	331	
ELC ACCESS PORTS	0	0	0	
DCH	254	242	12	

A.3. CUBE license

The CUBE licenses are shown below:

```
License Store: Primary License Storage
StoreIndex: 0   Feature: ipbasek9                         Version: 1.0
        License Type: Permanent
        License State: Active, In Use
        License Count: Non-Counted
        License Priority: Medium
StoreIndex: 1   Feature: uck9                             Version: 1.0
        License Type: Permanent
        License State: Active, In Use
        License Count: Non-Counted
        License Priority: Medium
License Store: Built-In License Storage
StoreIndex: 0   Feature: securityk9                       Version: 1.0
        License Type: EvalRightToUse
        License State: Active, Not in Use, EULA not accepted
            Evaluation total period: 8  weeks 4  days
            Evaluation period left: 8  weeks 4  days
            Period used: 0  minute  0  second
        License Count: Non-Counted
        License Priority: None
StoreIndex: 1   Feature: uck9                             Version: 1.0
        License Type: EvalRightToUse
        License State: Inactive
            Evaluation total period: 8  weeks 4  days
            Evaluation period left: 8  weeks 4  days
            Period used: 0  minute  0  second
        License Count: Non-Counted
        License Priority: None
StoreIndex: 2   Feature: datak9                           Version: 1.0
        License Type: EvalRightToUse
        License State: Active, Not in Use, EULA not accepted
            Evaluation total period: 8  weeks 4  days
            Evaluation period left: 8  weeks 4  days
            Period used: 0  minute  0  second
        License Count: Non-Counted
        License Priority: None
StoreIndex: 3   Feature: FoundationSuiteK9                Version: 1.0
        License Type: EvalRightToUse
        License State: Active, Not in Use, EULA not accepted
            Evaluation total period: 8  weeks 4  days
            Evaluation period left: 8  weeks 4  days
            Period used: 0  minute  0  second
        License Count: Non-Counted
        License Priority: None
StoreIndex: 4   Feature: AdvUCSuiteK9                     Version: 1.0
        License Type: EvalRightToUse
        License State: Active, Not in Use, EULA not accepted
            Evaluation total period: 8  weeks 4  days
            Evaluation period left: 8  weeks 4  days
            Period used: 0  minute  0  second
        License Count: Non-Counted
        License Priority: None
StoreIndex: 5   Feature: ios-ips-update                   Version: 1.0
        License Type: EvalRightToUse
        License State: Active, Not in Use, EULA not accepted
            Evaluation total period: 8  weeks 4  days
            Evaluation period left: 8  weeks 4  days
            Period used: 0  minute  0  second
        License Count: Non-Counted
        License Priority: None
StoreIndex: 6   Feature: SNASw                            Version: 1.0
        License Type: EvalRightToUse
        License State: Active, Not in Use, EULA not accepted
            Evaluation total period: 8  weeks 4  days
            Evaluation period left: 8  weeks 4  days
            Period used: 0  minute  0  second
        License Count: Non-Counted
        License Priority: None
StoreIndex: 7   Feature: cme-srst                         Version: 1.0
        License Type: RightToUse
        License State: Active, In Use
        License Count: 20/0  (In-use/Violation)
        License Priority: Low
```

Appendix B. Additional information

- Request for Proposal – Cover Letter
- Annex B to the RFP, Technical Response Workbook(Excel format)
- Annex C to the RFP, Financial Response Workbook (Excel format)
- Annex D to the RFP, Vendor Registration Form
- Annex E to the RFP, UNHCR General Conditions of Contract for the Provision of Goods and Services

*** End of document ***