United Nations High Commissioner for Refugees UNHCR

Single line diagram and Mounting PV Structure drawing

For

Solar Power Systems for IPNA/BRA Building – Sana'a

Project: RFQ/YEMSA/SUB/2022/36

2022/11/28

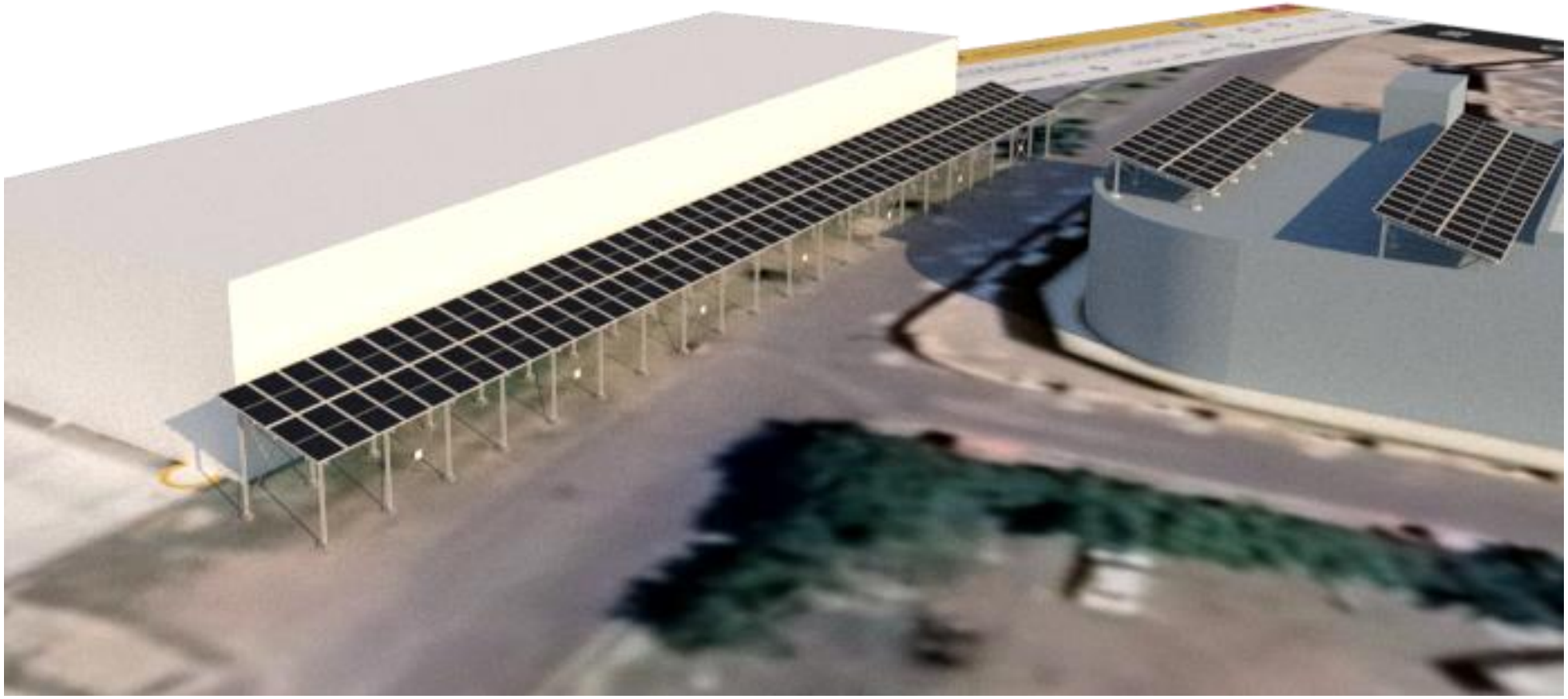

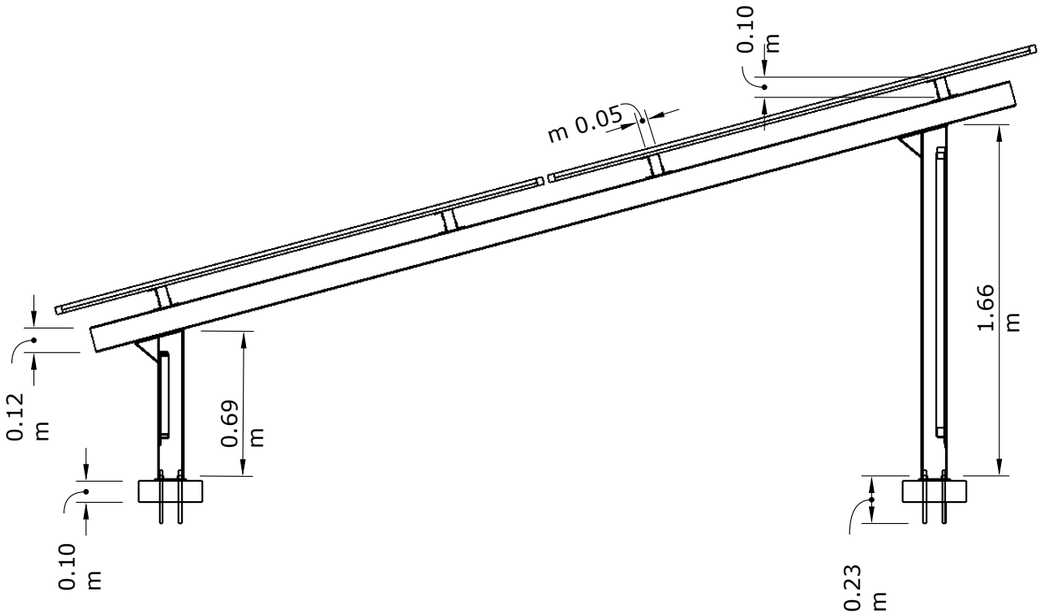

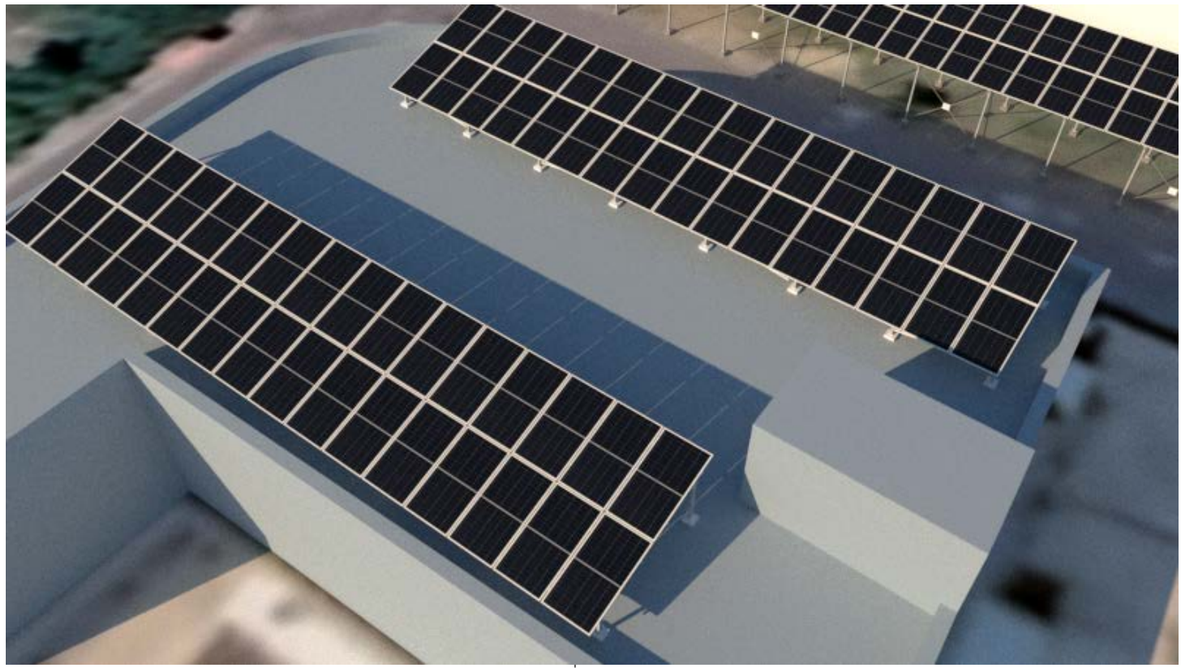

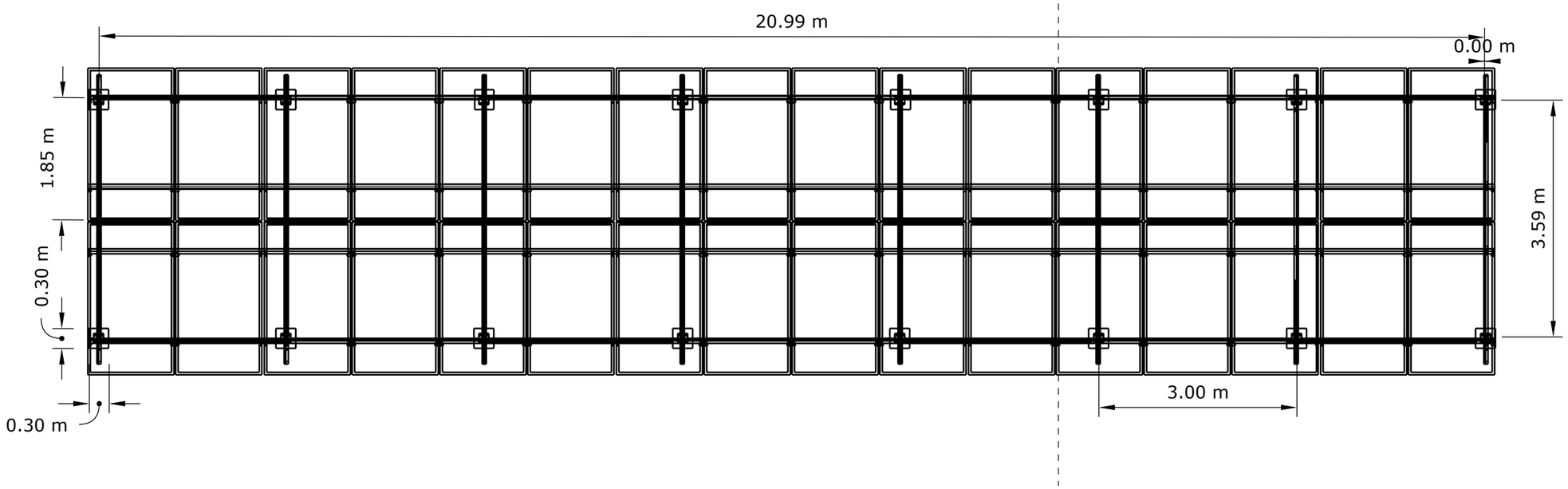

Funded by:

UNHCR
United Nations High Commissioner for Refugees
Haut Commissariat des Nations Unies pour les réfugiés

Reference:
RFQ/YEMSA/SUB/2022/36

DRAWING TITLE:
TOP-ROOF-STURCTURE

DRAWN BY:	CHECKED BY:	APPROVED BY:	DATE:
Sehab Tech	UNHCR	UNHCR	28/11/2022

Project Name:
Supply, Installation, Commissioning, Operation, Testing, and Maintenance of Micro-Grid ESS Solar System Project at Sana'a Governorate-Yemen

Consultant:
Sehab Tech
For Green Technology

PROJECT NO:	SCALE:	SHEET SIZE:
-	0:000	A3

DRAWING NO:	SHEET NO:
-	0 OF 0

REVISION:
-

UNIT:
-

N
W
E
S

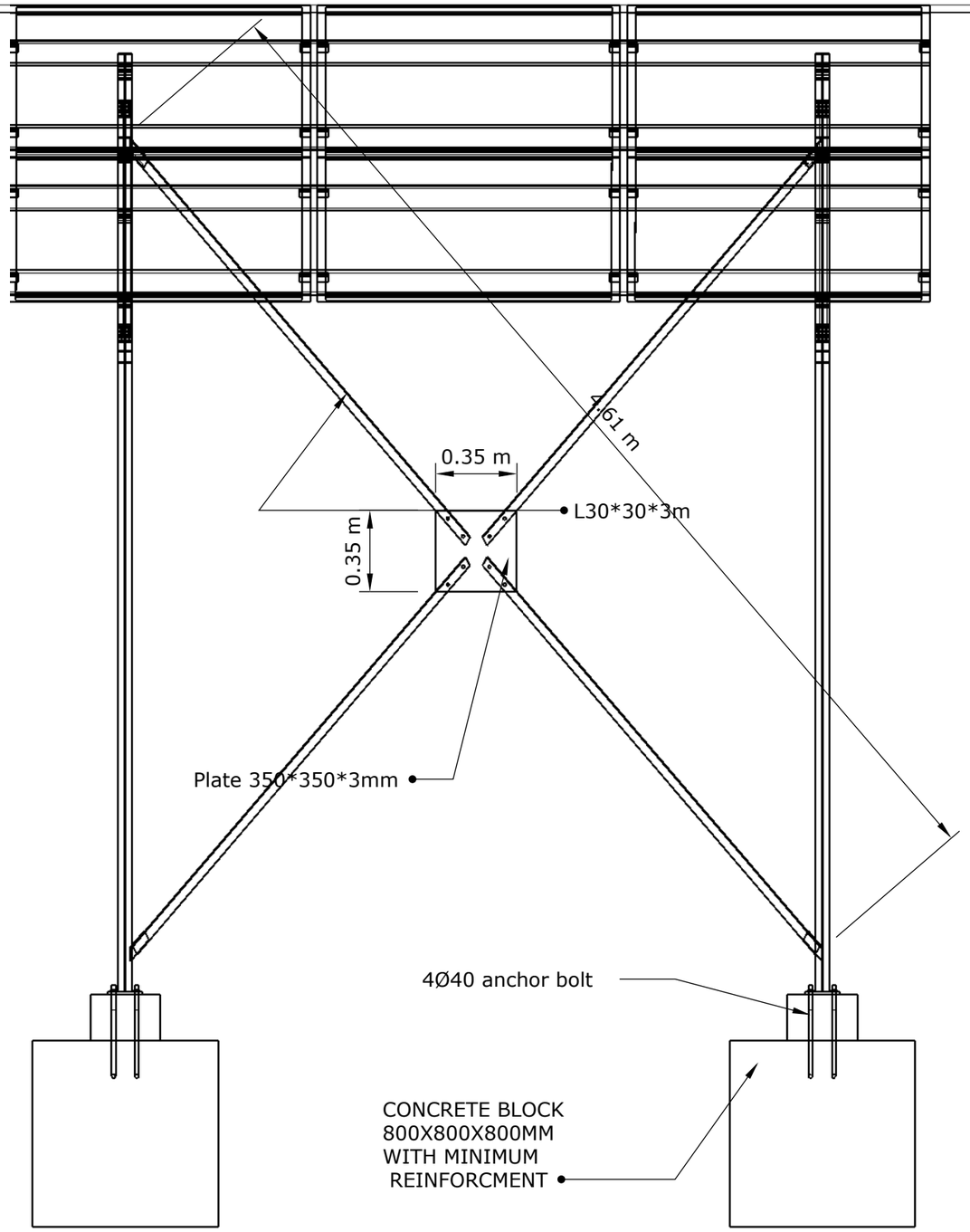

Back View Section Brassing

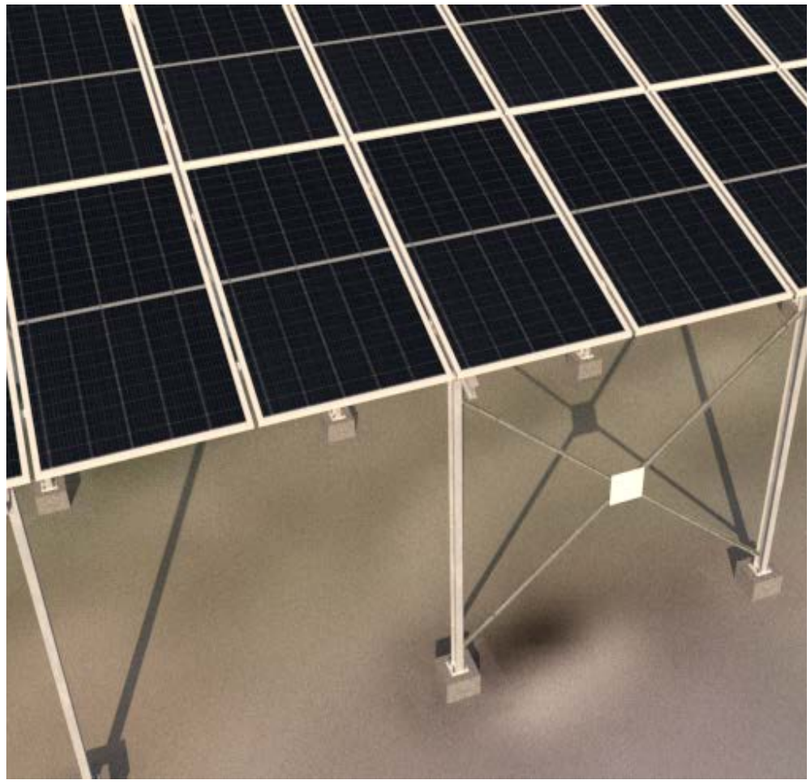

Funded by:

UNHCR
United Nations High Commissioner for Refugees
Haut Commissariat des Nations Unies pour les réfugiés

Reference:
RFQ/YEMSA/SUB/2022/36

DRAWING TITLE:
Grounding-Mounting-PV-STURCTURE

DRAWN BY:	CHECKED BY:	APPROVED BY:	DATE:
Sehab Tech	UNHCR	UNHCR	28/11/2022

Project Name:
Supply, Installation, Commissioning, Operation, Testing, and Maintenance of Micro-Grid ESS Solar System Project at Sana'a Governorate-Yemen

Consultant:
Sehab Tech
For Green Technology

PROJECT NO:	SCALE:	SHEET SIZE:
-	0:000	A3
DRAWING NO: -	SHEET NO: 0 OF 0	
REVISION: -		
UNIT: -		

N
W E
S

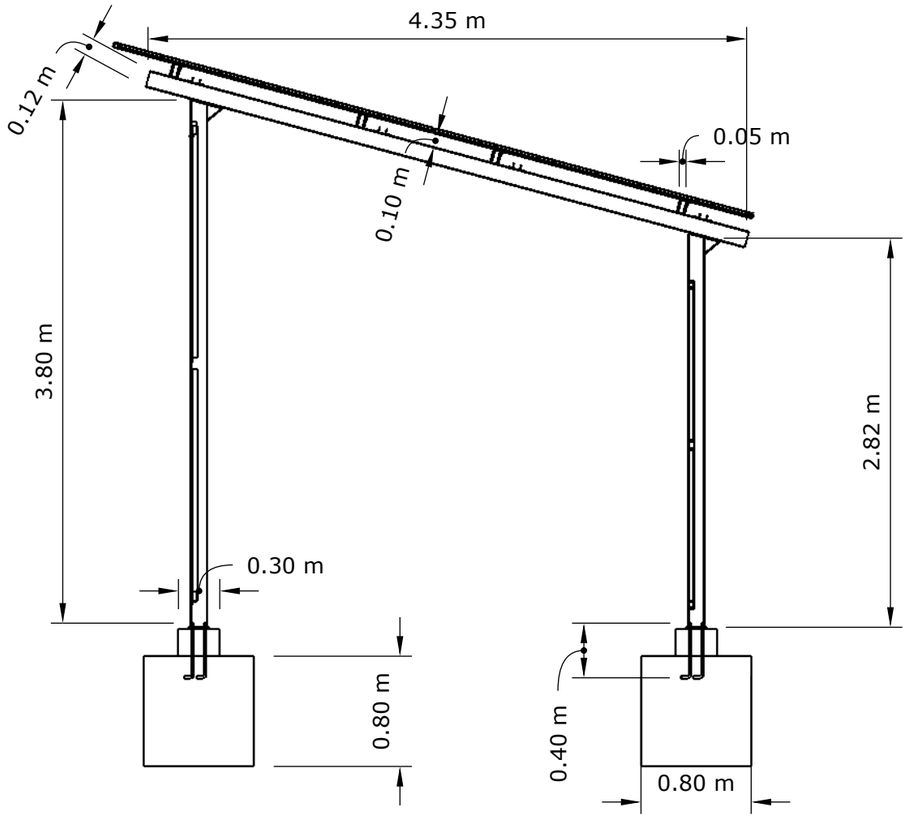

Side View Section

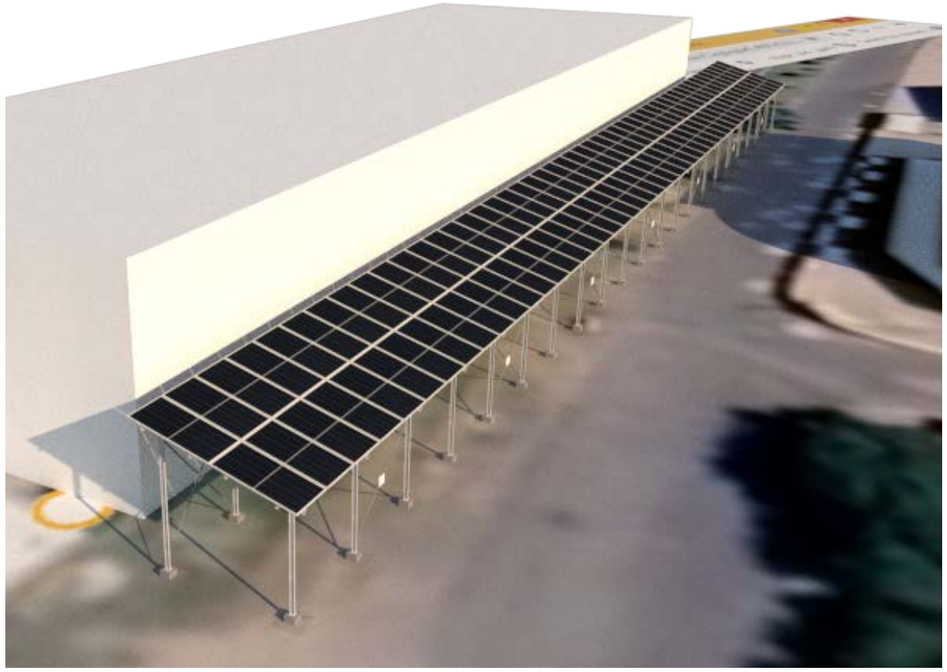

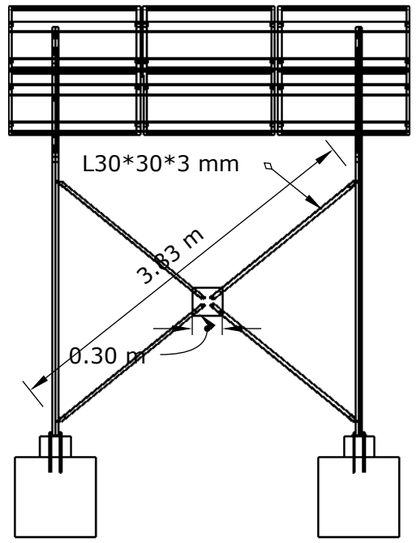

Front View Section Brassing

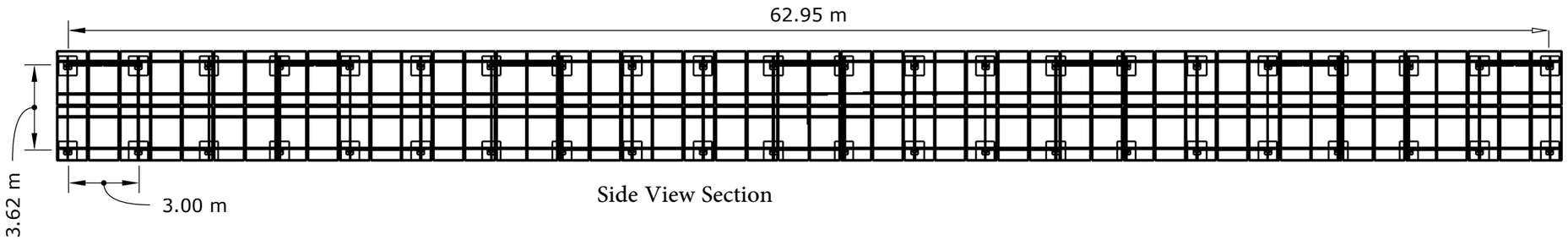

Side View Section

Funded by:

UNHCR
United Nations High Commissioner for Refugees
Haut Commissariat des Nations Unies pour les réfugiés

Reference:
RFQ/YEMSA/SUB/2022/36

DRAWING TITLE:
Grounding-Mounting-PV- STURCTURE

DRAWN BY:	CHECKED BY:	APPROVED BY:	DATE:
Sehab Tech	UNHCR	UNHCR	28/11/2022

Project Name:
Supply, Installation, Commissioning, Operation, Testing, and Maintenance of Micro-Grid ESS Solar System Project at Sana'a Governorate-Yemen

Consultant:
Sehab Tech
For Green Technology

PROJECT NO:	SCALE:	SHEET SIZE:
-	0:000	A3

DRAWING NO:	SHEET NO:
-	0 OF 0

REVISION: -

UNIT: -

N W E S

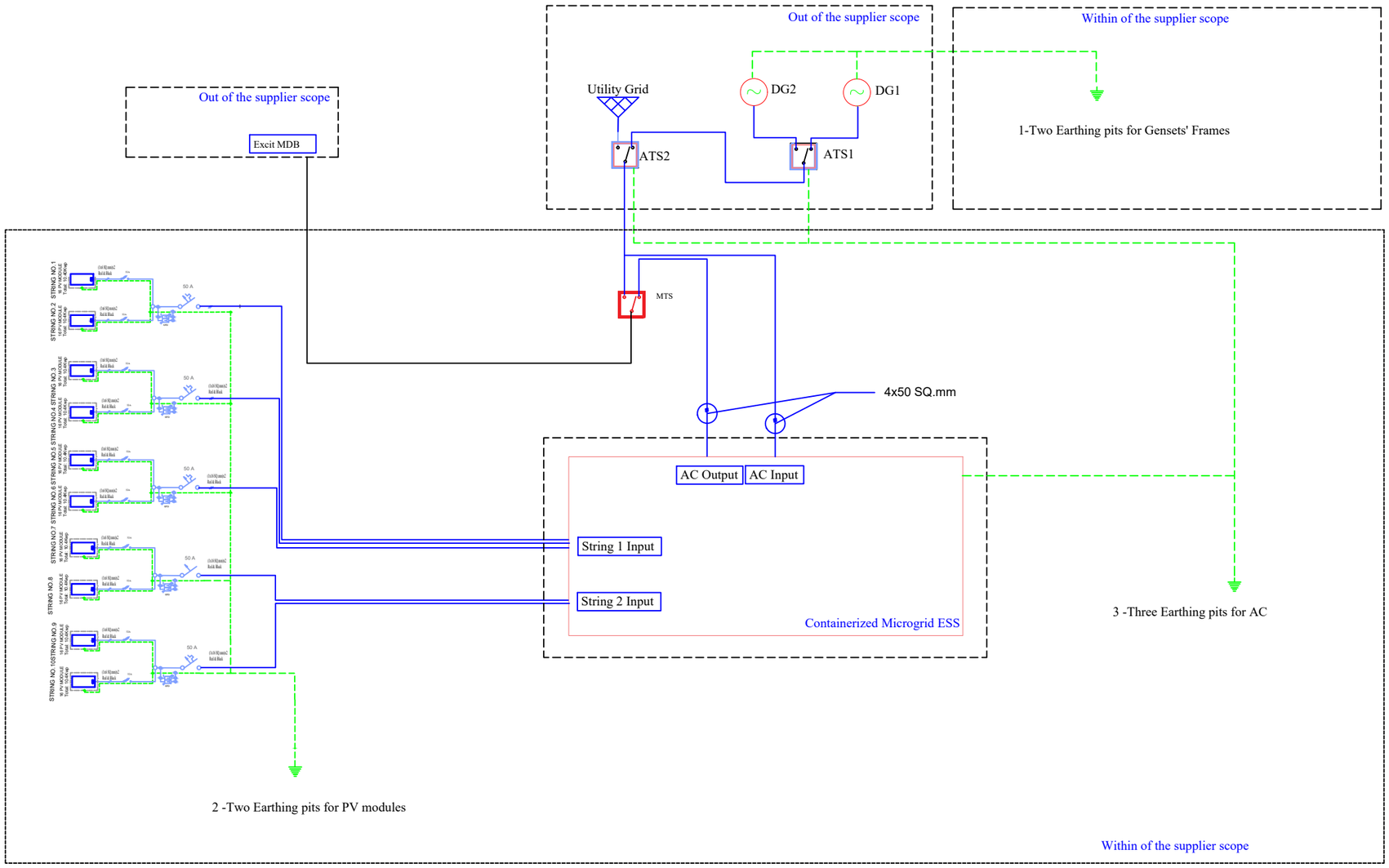

Remarks :

1-The connection of AC input terminal of the Containerized Microgrid ESS will be wiring directly to ATS2 Output at Genset's Room

2- The AC Output cable terminal of the ESS will connect to the new MTS as shown .

3- MTS it will install near to the ATS2 Output connection for emergency or maintenance purpose .

4- The output cable from ATS 2 to Exit MDB at the building is already exit, need just to switch the output terminal from ATS 2 to New MTS.

5- the minimum space between grounding pits is three meters.

6- The AC Input terminal cable will jumbering over the New MTS Terminl Input of ATS2.

LEGEND

SYMBOL	DESCRIPTION
	PHOTOVOLTAIC MODULE
MTS	MANUAL CHANGE OVER
ATS	Automatic Transfer Switch
	SURGE ARRESTER
	CIRCUIT BREAKER (MCB)
	DC FUSE

rev	description	by	date
REV:	DESCRIPTION:	BY:	DATE:

Funded by:

UNHCR
United Nations High Commissioner for Refugees
Haut Commissariat des Nations Unies pour les réfugiés

Reference: RFQ/YEMSA/SUB/2022/36

DRAWING TITLE: SINGLE-LINE-DIAGRAM

DRAWN BY:	CHECKED BY:	APPROVED BY:	DATE:
Sehab Tech	UNHCR	UNHCR	28/11/2022

Project Name: Supply, Installation, Commissioning, Operation, Testing, and Maintenance of Micro-Grid ESS Solar System Project at Sana'a Governorate-Yemen

Consultant: Sehab Tech For Green Technology

PROJECT NO: -
SCALE: 0:000
SHEET SIZE: A3
DRAWING NO: -
SHEET NO: 0 OF 0
REVISION: -
UNIT: -