UNITED NATIONS HIGH COMMISSIONER
FOR REFUGEES (UNHCR)

SOLARIZATION OF DHQ HOSPITAL LAKKI MARWAT UNDER RAHA PROGRAMME-2022

DRAWINGS

AUGUST, 2022

NATIONAL ENGINEERING SERVICES PAKISTAN (PVT) LIMITED
NESPAK HOUSE, Sector-G, 5/2, P. O. Box 2461, Islamabad
PHONE : (0092 51) 9221910-13 - Fax : (0092 51) 9221914
E-mail: nespak@cyber.net.pk Website: www.nespak.com.pk

Clearance Code	4199/321/M/124(22)	Doc No.	4199-03	Rev No.	0

1- DHQ HOSPITAL LAKKI MARWAT

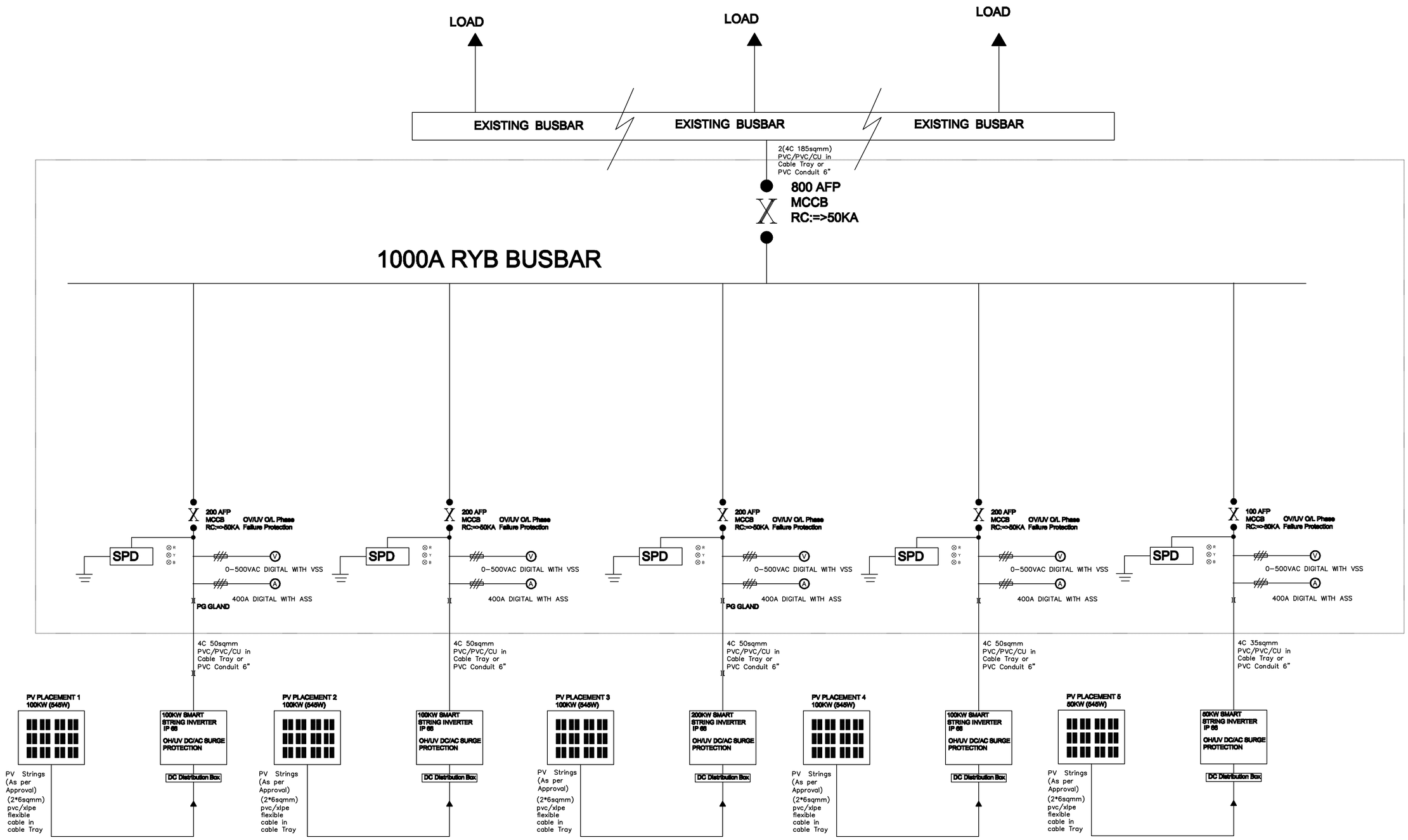

LAKKI MARWAT

UNHCR PAKISTAN

SINGLE LINE DIAGRAM

NATIONAL ENGINEERING SERVICES
PAKISTAN (PVT.) LTD. ISLAMABAD

SCALE	NO.	REV.
N.T.S	4199/325/BD/01E01	0
DATE AUGUST,22		

INVERTER SAFETY
SPECS
Input-side Disconnection Device
Anti-islanding Protection
AC Overcurrent Protection
DC Reverse-polarity Protection
PV-array String Fault Monitoring
DC Surge Arrester Type II
AC Surge Arrester Type II
DC Insulation Resistance Detection
Residual Current Monitoring Unit
Communication
Display LED Indicators, Bluetooth + AP
(or as approved by Engineer)

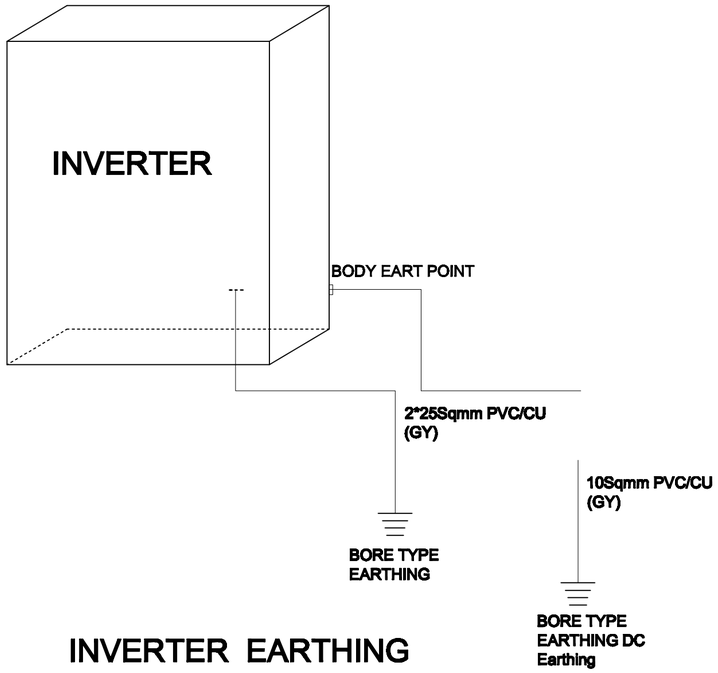

INVERTER EARTHING

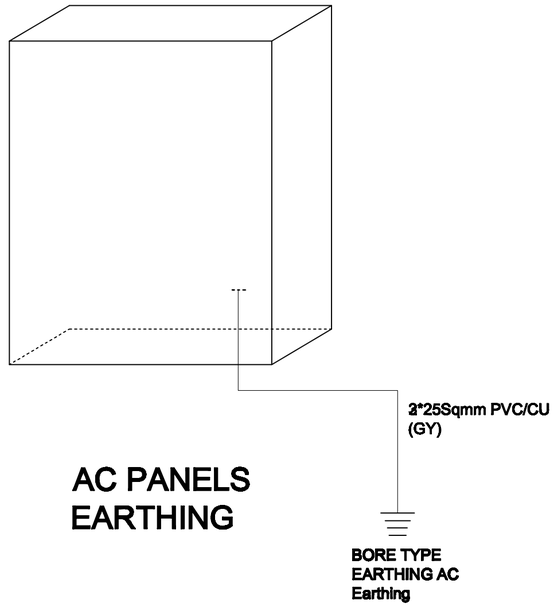

AC PANELS
EARTHING

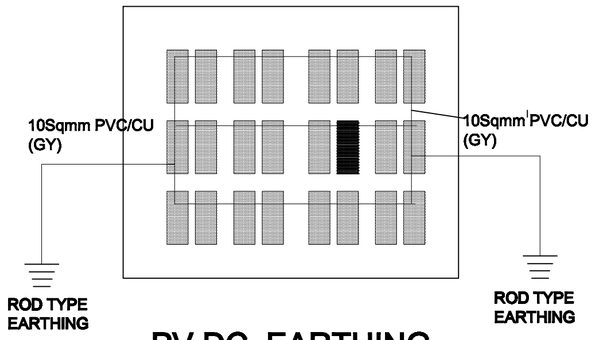

PV DC EARTHING

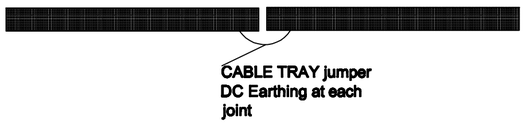

CABLE TRAY
EARTHING

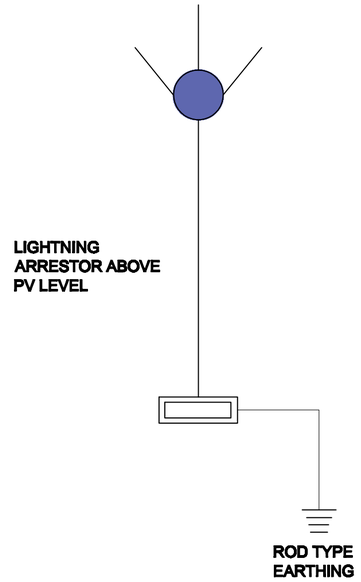

LIGHTNING PROTECTION

UNHCR PAKISTAN	EARTHING DETAILS		
NATIONAL ENGINEERING SERVICES PAKISTAN (PVT.) LTD. ISLAMABAD	SCALE N.T.S	NO.	REV.
	DATE AUGUST,22	4199/325/BD/01E02	0

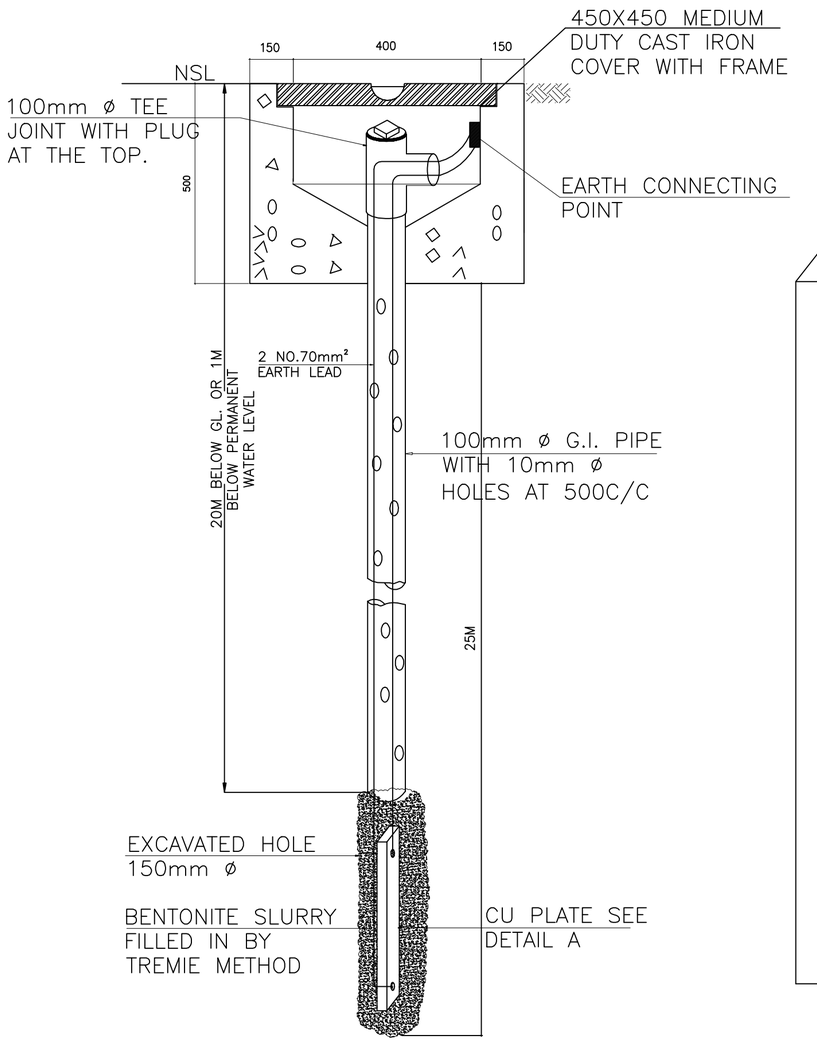

EARTH ELECTRODE

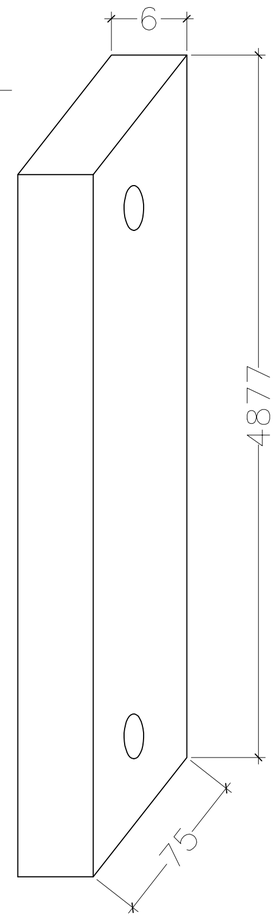

DETAIL A

PLATE TYPE EARTH ELECTRODE

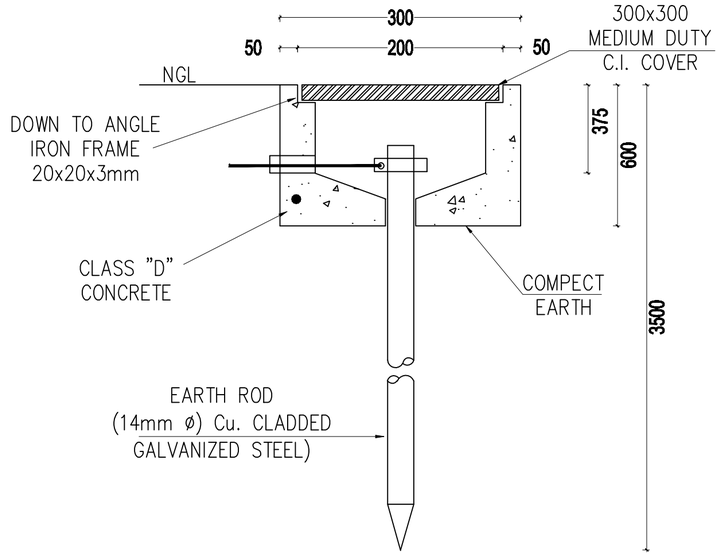

ROD TYPE EARTHING
ELECTRODE
DETAIL–1

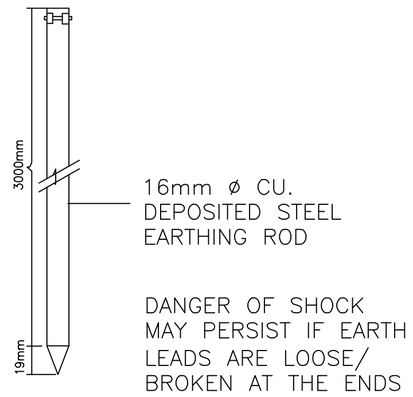

ROD TYPE EARTHING

UNHCR PAKISTAN	EARTHING DETAILS		
NATIONAL ENGINEERING SERVICES PAKISTAN (PVT.) LTD. ISLAMABAD	SCALE N.T.S	NO.	REV.
	DATE AUGUST,22	4199/325/BD/01E03	0